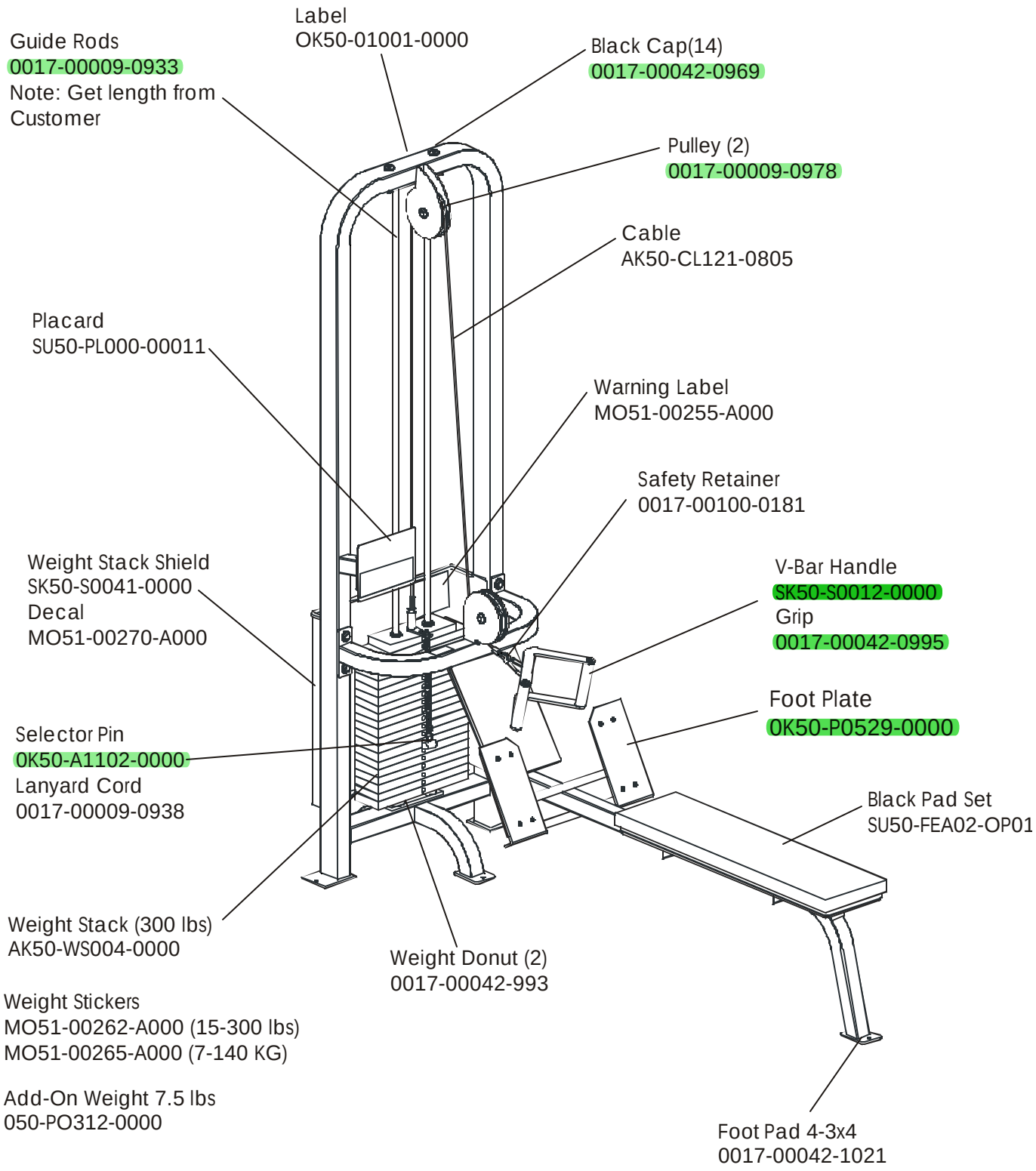STRENGTH 9000 SERIES TRAINING EQUIPMENT
SU50 Low Row